INSTALLATION INSTRUCTION

88094

Rev D

FOR RANCHO SUSPENSION SYSTEM **RS6594B**
4WD & 2WD NISSAN TITAN

READ ALL INSTRUCTIONS THOROUGHLY FROM START TO FINISH BEFORE BEGINNING INSTALLATION

IMPORTANT NOTES!

WARNING: This suspension system will enhance the off-road performance of your vehicle. It will handle differently, both on-road and off-road, from a factory equipped passenger car or truck. Failure to drive this vehicle safely may result in serious injury or death to the driver and passengers. ALWAYS WEAR your seat belt, REDUCE your speed, and AVOID sharp turns and other abrupt maneuvers.

A. Before installing this system, have the vehicle's alignment and frame checked by a certified technician. The alignment must be within factory specifications and the frame of the vehicle must be sound (no cracks, damage or corrosion).

B. Do not install a body lift kit with this suspension system or interchange Rancho components with parts from another manufacturer. Use Rancho shock absorbers RS99773 or RS5773 for the front, and RS99304 or RS5304 for the rear.

C. Do not powdercoat or plate any of the components in this system. To change the appearance of components, enamel paint can be applied over the original coating.

D. Each hardware kit in this system contains fasteners of high strength and specific size. Do not mix hardware kits or substitute a fastener of lesser strength. See bolt identification table on page 2.

E. Compare the contents of this system with the parts list in these instructions. If any parts are missing, contact the Rancho Technical Department at 1-734-384-7804.

F. Install all nuts and bolts with a flat washer. When both SAE (small OD) and USS (large OD) washers are used in a fastener assembly, place the USS washer against the slotted hole and the SAE washer against the round hole.

G. Apply a drop of thread locking compound to all bolts during installation. CAUTION: Thread locking compound may irritate sensitive skin. Read warning label on container before use.

H. Unless otherwise specified, tighten all nuts and bolts to the standard torque specifications shown in the table on page two. USE A TORQUE WRENCH for accurate measurements.

I. Some of the service procedures require the use of special tools designed for specific procedures. The following tools and supplies are recommended for proper installation of this system: ☑

- ☐ Nissan Titan Service Manual
- ☐ Gear Arm Puller ST29020001
- ☐ Ball Joint Remover HT72520000
- ☐ Spring Compressor
- ☐ Drill motor with Assorted Drills
- ☐ 1" Hole Saw
- ☐ Torque Wrench (250 FT-LB capacity)
- ☐ 1/2" Drive Ratchet and Sockets
- ☐ Assorted Combination Wrenches
- ☐ Flare Nut Wrench
- ☐ Heavy Duty Jack Stands
- ☐ Wheel Chocks (wooden blocks)
- ☐ Hydraulic Floor Jack
- ☐ Center punch
- ☐ File
- ☐ Bench Vise
- ☐ Hammer
- ☐ Wire Brush (to clean bracket mounting surfaces)
- ☐ Silicone Lubricant
- ☐ Tape Measure
- ☐ **Safety Glasses** (wear safety glasses at all times)

J. It is extremely important to replace torsion bars, CV flanges, and front drive shaft/pinion relationships as original. Be sure to mark left/right, front/rear, and indexing of mating parts before disassembly. A paint marker or light colored nail polish is handy for this.

K. Suspension components that use rubber or urethane bushings should be tightened with the vehicle at normal ride height. This will prevent premature failure of the bushing and maintain ride comfort.

L. This suspension system was developed using the following tire & wheel combination: 35 x 12.5 x R18 tire, 18 x 8 wheel with 6 inches of wheel backspacing. Original equipment wheels can be used. Before installing any other combination, consult your local tire and wheel specialist.

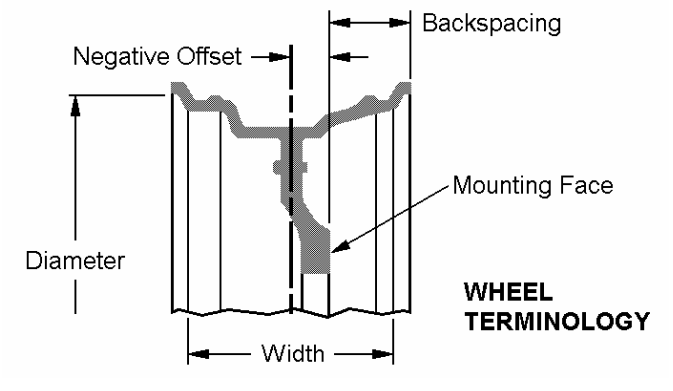

M. The required installation time for this system is approximately 5 to 6 hours. Check off the box (☑) at the beginning of each step when you finish it. Then when you stop during the installation, it will be easier to find where you need to continue from.

N. This suspension system will fit both 2WD and 4WD vehicles. If you are installing this system on a 2WD vehicle, omit steps pertaining to the front axle assembly.

O. Important information for the end user is contained in the consumer/installer information pack. If you are installing this system for someone else, place the information pack on the driver's seat. Please include the installation instructions when you finish.

P. Thank you for purchasing the best suspension system available. For the best installed system, follow these instructions. If you do not have the tools or are unsure of your abilities, have this system installed by a certified technician. RANCHO SUSPENSION IS NOT RESPONSIBLE FOR DAMAGE OR FAILURE RESULTING FROM AN IMPROPER OR MODIFIED INSTALLATION…

STANDARD BOLT TORQUE SPECIFICATIONS

INCH SYSTEM			METRIC SYSTEM			
Bolt Size	Grade 5	Grade 8	Bolt Size	Class 9.8	Class 10.9	Class 12.9
5/16	15 FT-LB	20 FT-LB	M6	5 FT-LB	9 FT-LB	12 FT-LB
3/8	30 FT-LB	35 FT-LB	M8	18 FT-LB	23 FT-LB	27 FT-LB
7/16	45 FT-LB	60 FT-LB	M10	32 FT-LB	45 FT-LB	50 FT-LB
1/2	65 FT-LB	90 FT-LB	M12	55 FT-LB	75 FT-LB	90 FT-LB
9/16	95 FT-LB	130 FT-LB	M14	85 FT-LB	120 FT-LB	145 FT-LB
5/8	135 FT-LB	175 FT-LB	M16	130 FT-LB	165 FT-LB	210 FT-LB
3/4	185 FT-LB	280 FT-LB	M18	170 FT-LB	240 FT-LB	290 FT-LB

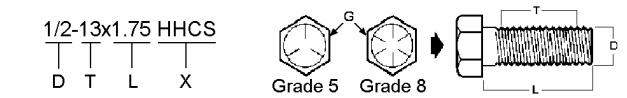

G = Grade Marking (bolt strength)
D = Nominal Diameter (inches)
T = Thread Pitch (threads per inch)
L = Length (inches)
X = Description (hex head cap screw)

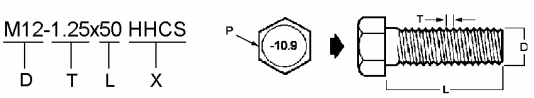

P = Property Class (bolt strength)
D = Nominal Diameter (millimeters)
T = Thread Pitch (thread width, mm)
L = Length (millimeters)
X = Description (hex head cap screw)

PARTS LIST

P/N	DESCRIPTION	QTY.
	Box 1 of 4	
170102	Brake Hose With Aluminum Washers	2
176160B	Aft Brace Bracket	4
176330	Front Crossmember	1
176331	Rear Crossmember	1
176332	Aft Brace	2
176333	Skid Plate	1
176339	End Link	2
176342	Sway Bar Spacer	2
860521	Aft Brace Bushing Kit	1
520041	Bushing	8
420042	Sleeve	4
860518	Cross Member Hardware Kit	1
	1/2-13 x 2.0 HHCS	1
	1/2-13 x 2.5 HHCS	1
	1/2-13 x 1.25 HHCS	2
	1/2-13 Stover Nut	4
	1/2 SAE Washer	8
	M12-1.75 x 90 HHCS	2
	M12-1.75 Stover Nut	2
	M12 Washer	4
	M14-2.0 x 100 HHCS	3
	M14-2.0 x 110 HHCS	4
	M14 -2.0 Stover Nut	7
	M14 Washer	14
860524	End Link Hardware Kit	1
	Bushing	4
	Sleeve	4
	M12-1.25 x 70 HHCS	4
	1/2 USS Washer	8
	1/2 SAE Washer	4
	Tie Wrap Kit	1
94180	Information Pack	1
780281	Rancho Decal	1
88094	Installation Instruction	1
94119	Consumer/Warranty information	1
94177	Warning Sticker	1

P/N	DESCRIPTION	QTY.
	Box 2 of 4	
176337	Knuckle, Left	1
	Box 3 of 4	
176338	Knuckle, Right	1
	Box 4 of 4	
15140	Riser Block	2
176334	Brake Cable Drop Bracket	1
176335	Rear Brake Line Bracket	1
176336	Bump Stop Spacer	2
740023	9/16-18 U-Bolt	4
860152	U-bolt Hardware Kit	1
	9/16-18 Nyloc Nut	8
	9/16 SAE Flat Washer	8
860519	Pin Kit	1
	.562 x 1.70 Pin	2
860520	Hardware Kit	1
	.75 x 1.1 Sleeve	1
	.75 x 1.3 Sleeve	1
	M8-1.25 x 55 HHCS	2
	M8-1.25 x 25 HHCS	2
	M10-1.50 x 30 HHCS	3
	3/8-16 x 1.0 HHTS	2
	M8-1.25 Nyloc Nut	2
	M10-1.50 Nyloc Nut	3
	M10 Washer	6
	M8 Washer	6
	M6-1.0 x 10 HHTS	1
	Thread Lock	3
860522	Aft Brace Hardware Kit	1
	1/2-13 x 4.0 HHCS	4
	1/2-13 Stover Nut	4
	1/2 SAE Washer	8
860525	Cotter Pin Kit	1
	1/8 Cotter Pin	4
	3/16 Cotter Pin	2

FRONT SUSPENSION ASSEMBLY

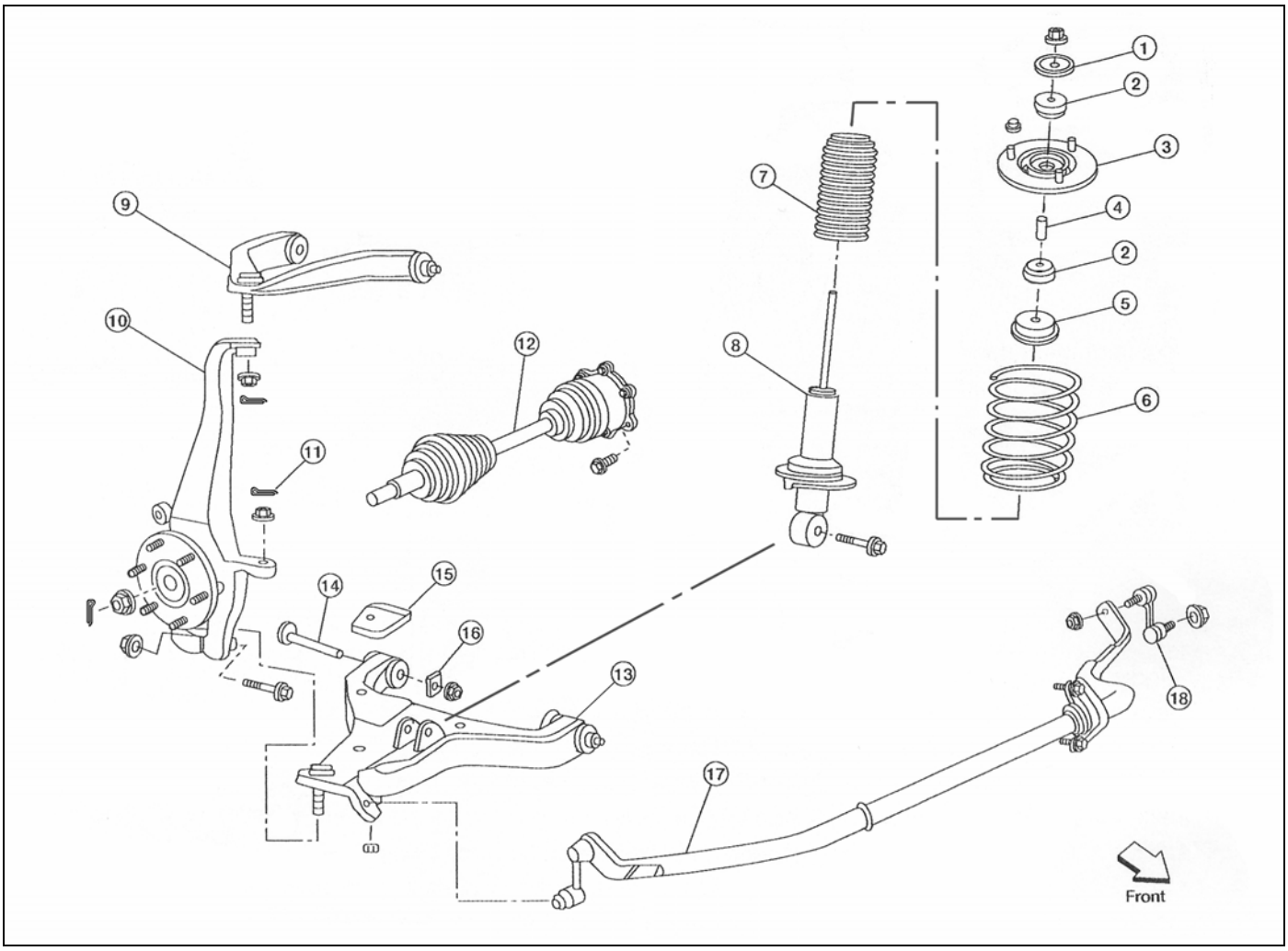

Item No.	Description	Item No.	Description
1	Washer	10	Steering Knuckle
2	Shock Absorber Bushing	11	Cotter Pin
3	Shock Absorber Mount	12	Front Axle Half Shaft
4	Spacer	13	Lower Control Arm
5	Upper Seat	14	Cam Bolt
6	Coil Spring	15	Bump Stop
7	Dust Cover	16	Cam Washer
8	Shock Absorber	17	Stabilizer Bar
9	Upper Control Arm	18	End Link

FRONT SUSPENSION

VEHICLE PREPARATION

1. ☐ Park the vehicle on a level surface. Set the parking brake and chock rear wheels. Measure and record the distance from the center of each wheel to the top of the fender opening. See illustration #1.

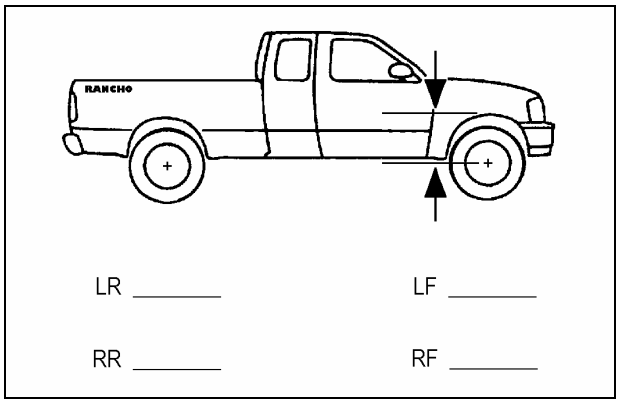

Illustration #1

2. ☐ Raise the front of the vehicle and support the frame with jackstands. Remove the front wheels and set them aside.

COIL SPRING & SHOCK ABSORBER REMOVAL

1. ☐ For installation reference, mark the coil spring and shock absorber upper mount.

2. ☐ Remove the shock absorber three upper mounting nuts. See Illustration #2. Do not remove the shock absorber rod nut.

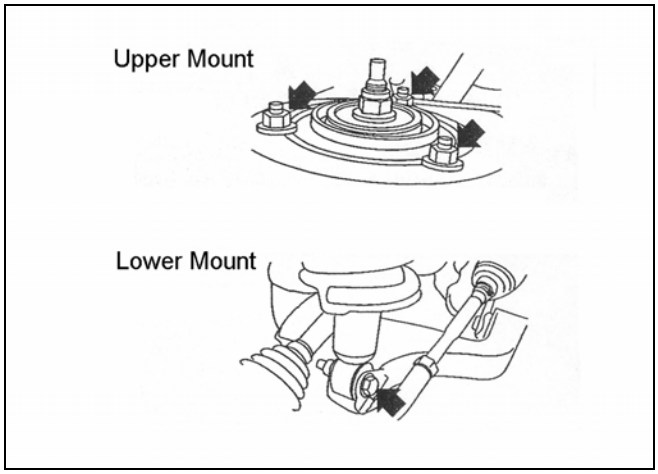

Illustration #2

3. ☐ Remove the shock absorber lower bolt.

4. ☐ Turn the steering knuckle out for clearance. Remove the coil spring and shock absorber assembly.

5. ☐ Repeat for the other side.

STEERING KNUCKLE, FRONT AXLE HALF SHAFT (4WD ONLY), & LOWER CONTROL ARM REMOVAL

1. ☐ If applicable, remove skid plates.

2. ☐ Remove the stabilizer bar end links.

3. ☐ Remove the Brake Caliper and its mounting bracket as an assembly. Hang the caliper assembly with wire or a tie wrap.

4. ☐ Label the brake rotor left or right. Remove the brake rotor.

5. ☐ Remove the cotter pin and axle shaft nut.

6. ☐ Remove the ABS sensor from the wheel hub. Separate the ABS line from the steering knuckle.

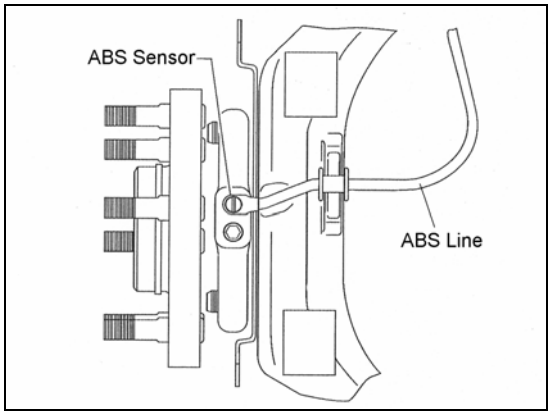

Illustration #3

7. ☐ Remove cotter pin and loosen ball stud nut on tie rod end. Separate tie rod end from steering knuckle with ball joint removing tool HT72520000. Remove ball stud nut.

8. ☐ Support the lower control arm with a jack.

9. ☐ Loosen upper ball joint nut. Separate knuckle from upper ball joint with removing tool. Remove ball joint nut.

10. ☐ Remove the steering knuckle lower pinch bolt. Tap the end of the axle shaft with a mallet to separate it from the Knuckle. Remove steering knuckle from axle shaft and lower ball joint. Do not pull the inner flange from the differential.

11. ☐ Reference mark half shaft flange to front differential. Remove half shaft mounting bolts. Carefully remove the front axle half shaft.

12. ☐ Reference mark the lower control arm adjusting bolts. Remove the adjusting bolts and nuts. Remove the lower control arm.

13. ☐ Repeat steps 3 through 12 for the other side.

FRONT DIFFERENTIAL REMOVAL (4WD ONLY)

1. ☐ Mark the front drive shaft flange and the companion flange of the front differential for installation reference.

2. ☐ Remove bolts and secure the drive shaft with wire or a tie wrap.

3. ☐ Disconnect the vent hose.

4. ☐ Remove the front crossmember. See illustration #4.

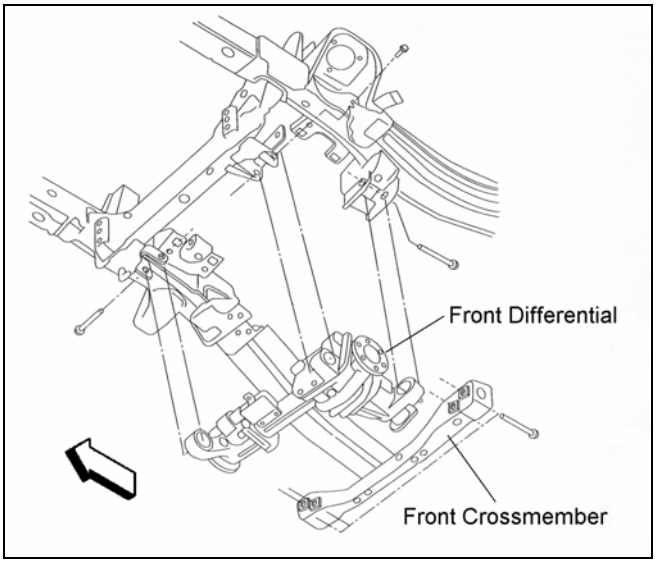

Illustration #4

5. ☐ Support the front differential with a jack. Remove the differential mounting bolts.

6. ☐ Carefully remove the front differential.

CROSSMEMBER, FRONT DIFFERENTIAL (4WD ONLY) & LOWER CONTROL ARM INSTALLATION

NOTE: Do not tighten bolts until all components are installed.

1. ☐ Loosely attach front crossmember 176330 to both lower control arm front pockets with the longer 14mm bolts from hardware kit 860518.

2. ☐ Loosely attach front crossmember 176330 to the front differential frame brackets with the 12mm hardware from kit 860518.

3. ☐ Mark the back of the front differential rear mounting bracket as shown in illustration #5.

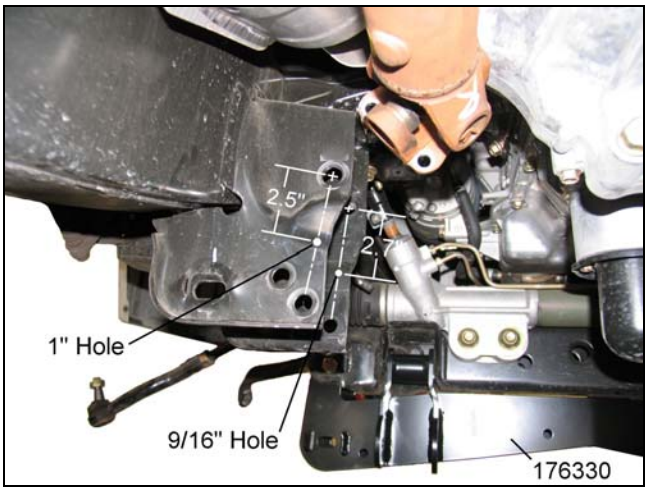

Illustration #5

4. ☐ Drill a 1” hole then a 9/16” hole at the marked locations. File sharp edges and paint exposed metal.

5. ☐ With the help of an assistant, loosely attach the front differential to front crossmember 176330. Use the shorter 14 mm bolts from kit 860518.

6. ☐ Support the front differential with a jack. Insert rear crossmember 176331 into both lower control arm rear pockets. Align the crossmember tab with the differential rear mount.

7. ☐ Loosely attach rear crossmember 176331 to the front differential and the lower control arm pockets with the 14 mm hardware from kit 860518. Use the shorter 14mm bolt for the differential. Install two of the original front crossmember bolts on the passenger side.

8. ☐ Loosely attach the lower control arms with the original cam bolts.

9. ☐ Tighten front and rear crossmember to pocket bolts to 98 ft-lbs. Tighten the front crossmember to differential bracket bolts to 75 ft-lbs.

10. ☐ Tighten the three front differential to cross member bolts to 135 ft-lbs.

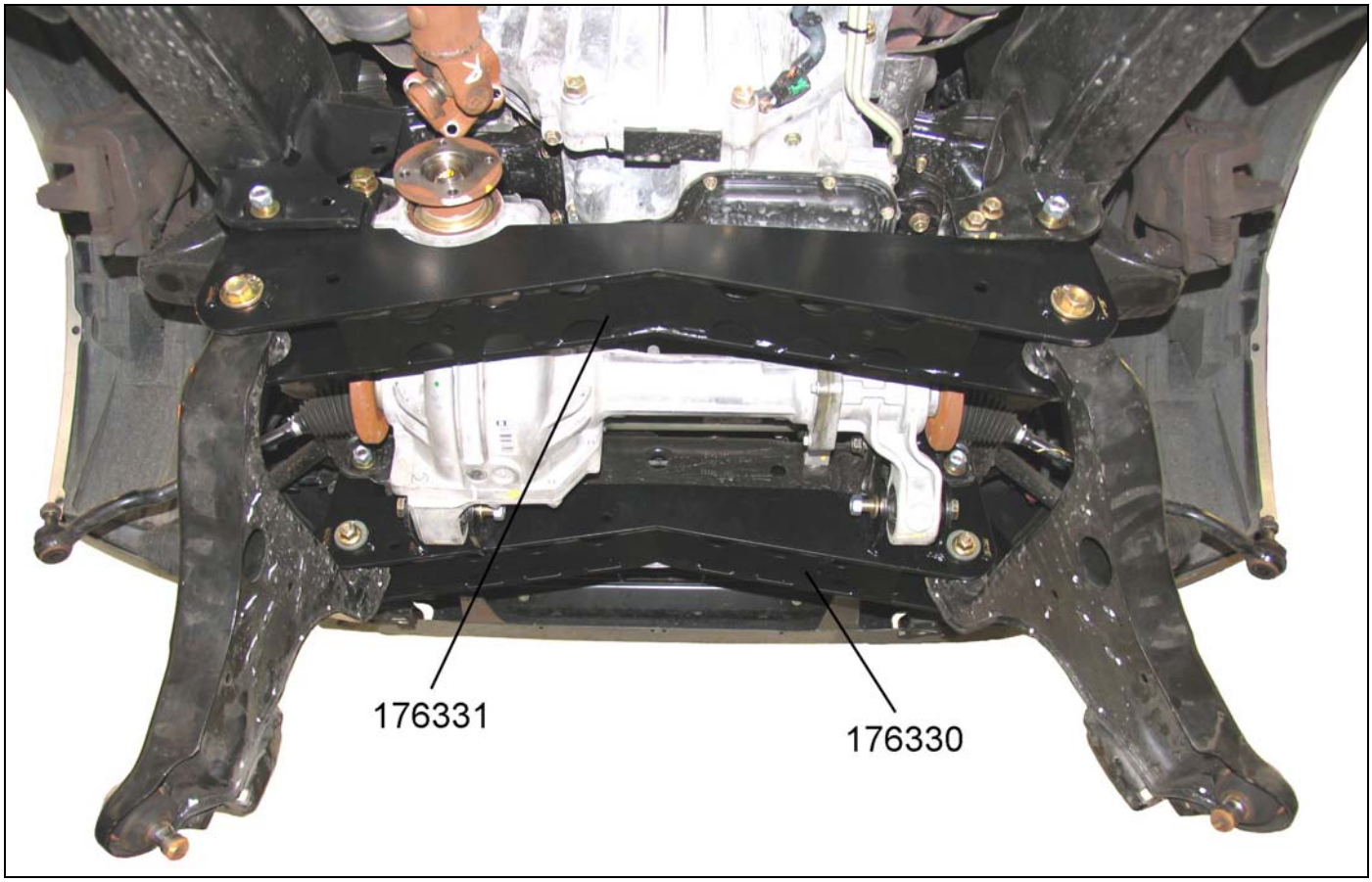

Illustration #6

BUMP STOP SPACER INSTALLATION

1. ☐ Insert tab of bump stop spacer 176336 into existing hole on frame bracket.

2. ☐ Using the spacer as a template mark the mounting hole on the bracket. Remove spacer.

3. ☐ Drill a 5/16" hole at the marked location.

Illustration #7

4. ☐ Attach bump stop spacer 176336 to frame bracket with the self-tapping screw from hardware kit 860520.

5. ☐ Repeat for other side.

FRONT AXLE HALF SHAFT (4WD ONLY) & STEERING KNUCKLE INSTALLATION

1. ☐ Align the reference mark on the front axle half shaft with the front differential flange.

2. ☐ Attach the half shaft to the differential with the original bolts. Tighten bolts evenly to 54 ft-lbs.

3. ☐ Repeat for other side.

4. ☐ Remove the wheel hub mounting bolts from the driver side steering knuckle. Remove the hub, splash guard and ABS bracket. See illustration #8.

5. ☐ Attach splash guard, wheel hub and ABS bracket to steering knuckle 176337 with the original bolts. Tighten hub bolts to 155 ft-lbs.

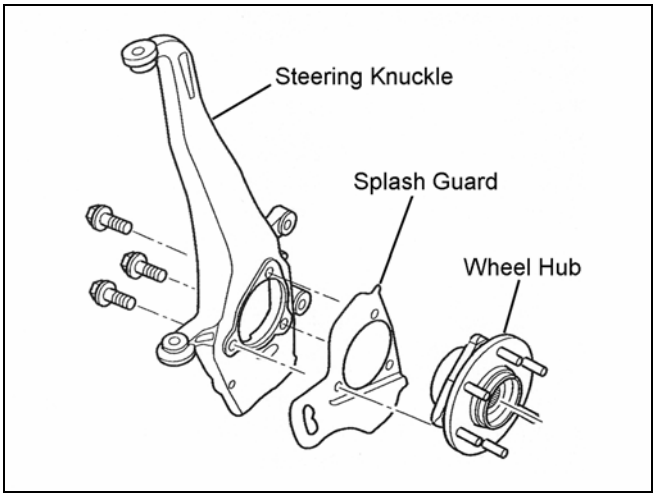

Illustration #8

6. ☐ Support the driver side lower control arm with a jack.

7. ☐ Insert lower ball joint, axle shaft and upper ball joint into steering knuckle 176337. Attach the upper ball joint to the knuckle with the original nut. Tighten the nut to 58 ft-lbs. Install a new cotter pin.

8. ☐ Install the steering knuckle pinch bolt and nut. Tighten the nut to 70 ft-lbs.

9. ☐ Install the axle shaft nut. Tighten the nut to 101 ft-lbs.

10. ☐ Install the ABS sensor. Attach sensor wire to mounts.

11. ☐ Repeat steps 4 through 10 to install steering knuckle 176338 on the passenger side.

SHOCK ABSORBER & COIL SPRING INSTALLATION

CAUTION: Do not remove the shock absorber rod nut until the coil spring is compressed.

1. ☐ Set the shock absorber & coil spring assembly in a commercial spring compressor or set the shock absorber in a bench vise and install a spring compressor on the coil spring.

WARNING: Different types of spring compressors are available for use. Follow the manufacturer's safety procedures for the spring compressor that you are using.

2. ☐ Slowly compress the coil spring until the mounting insulator can be turned by hand and/or all spring tension on the rod nut is removed.

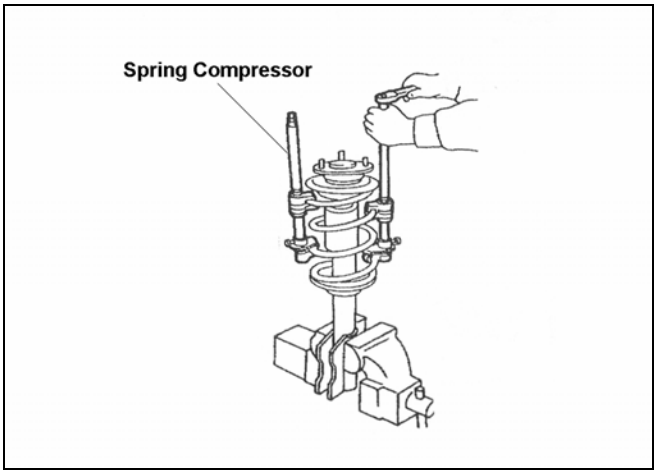

Illustration #9

3. ☐ Hold the end of the shock absorber rod and remove the lock nut.

4. ☐ Separate the shock absorber from the coil spring.

5. ☐ Install new dust cover and bushing on Rancho shock absorber RS99773 or RS5773.

6. ☐ Insert the shock into the coil spring. Align coil with step in lower seat. Align upper mount as previously marked.

NOTE: The step in the shock absorber lower seat faces outside of vehicle.

7. ☐ Install bushing washer and lock nut. Tighten the lock nut until the bushings are slightly compressed.

8. ☐ Remove the spring compressor.

9. ☐ Insert the shock absorber and coil spring assembly into the upper and lower mounts.

10. ☐ Attach the shock assembly with the original hardware. Tighten the upper nuts to 22 ft-lbs. and the lower bolt to 99 ft-lbs.

11. ☐ Repeat for other side.

TIE ROD END SWAP

1. ☐ Mark the location of the jam nuts on both tie rods.

2. ☐. Loosen the jam nuts and remove the tie rod ends. See illustration #10.

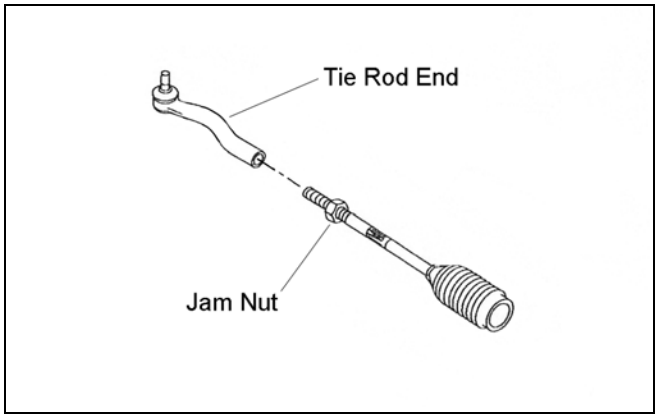

Illustration#10

3. ☐ Install the passenger side tie rod end on the driver side. Install the driver side tie rod end on the passenger side.

4. ☐ Adjust the jam nuts and tie rod ends to there original locations. Face the ball joints downward.

5. ☐ Insert the tie rod ends into the steering knuckles from the top.

6. ☐ Attach the tie rod ends to the knuckles with the original hardware. Tighten the nuts to 63 ft-lbs. Install a new cotter pin.

SWAY BAR SPACER & END LINK INSTALLATION

1. Remove the sway bar mounting bracket bolts. Insert spacer 176342 between the bracket and mounting location. See illustration #12. Reinstall bolts.

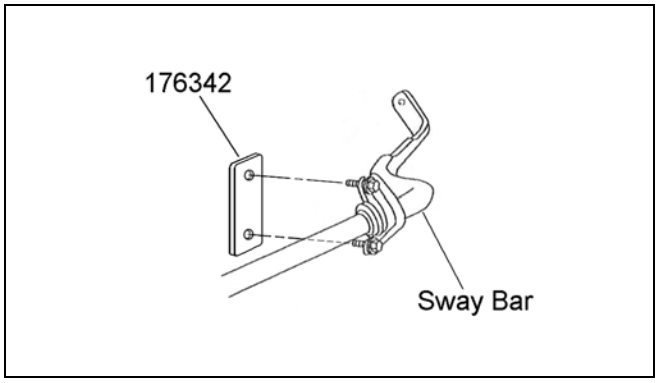

Illustration #11

2. Repeat for other side. Tighten sway bar mounting bolts to 94 ft. lbs.

3. ☐ Apply silicone lubricant to a bushing and sleeve from kit 860524. Press the bushing then the sleeve into new end link 176339. See illustration #12.

4. ☐ Install the remaining bushings and sleeves.

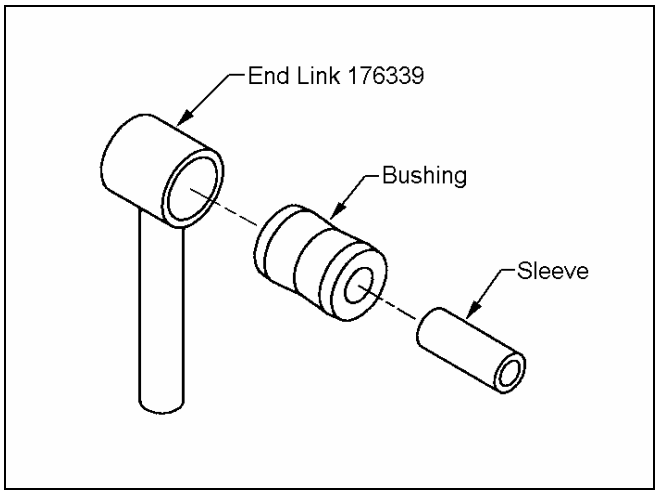

Illustration #12

5. ☐ Attach the end link to the stabilizer bar and lower control arm bracket with the hardware from kit 860524. See illustration #13. Tighten the end link bolts to 62 ft-lbs.

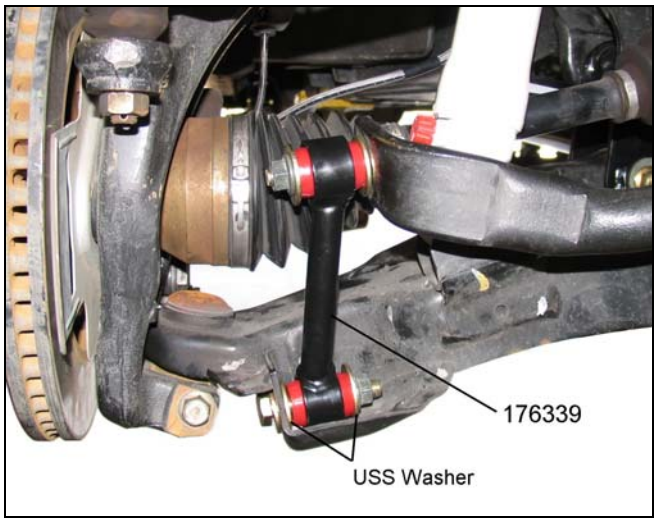

Illustration #13

6. ☐ Repeat for other side.

BRAKE HOSE REPLACEMENT

NOTE: To keep the brake bleeding process to just the front calipers, do not allow the brake fluid to drain completely from the master cylinder reservoir.

1. ☐ Install brake rotor. Attach brake caliper to new steering knuckle. Tighten mounting bolts to 155 ft-lbs.

2. ☐ Separate the front brake hose from the brake tube at the frame rail. Plug or cap the tube to prevent brake fluid leakage.

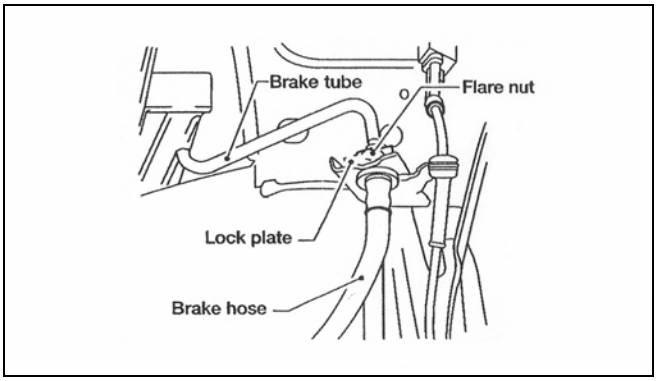

Illustration #14

3. ☐ Remove locking plate and brake hose from bracket.

4. ☐ Remove union bolt and brake hose from caliper. Discard copper washers.

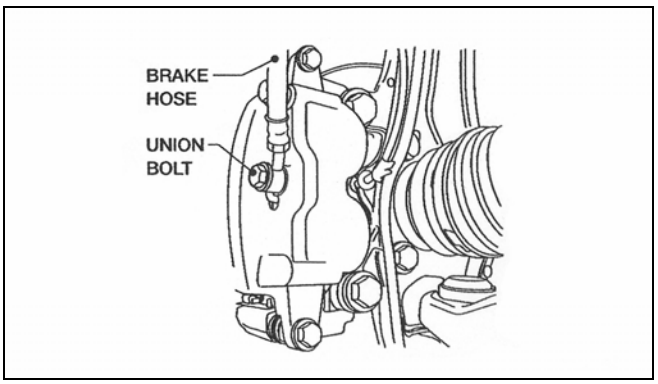

Illustration #15

5. ☐ Attach brake hose 170102 to caliper with NEW aluminum washers. Tighten union bolt to 13 ft-lbs.

6. ☐ Insert brake hose through bracket. Secure hose to bracket with locking plate.

7. ☐ Attach brake tube to hose. Tighten flare nut securely.

8. ☐ Repeat for other side.

9. ☐ Bleed the front brakes.

AFT BRACE INSTALLATION

1. ☐ Lubricate two bushings (520041) and one sleeve (420042), from kit 860521, with a silicone spray. Press the bushings and sleeve into aft brace 176332 as shown in illustration #16.

2. ☐ Repeat step 1 to install the rest of the bushings and sleeves.

3. ☐ Using the shorter 1/2" bolts, loosely attach two aft brace brackets (176160) to rear cross member 176331 with the hardware from kit 860518.

4. ☐ Loosely attach the angled end of each aft brace to the installed brackets with the hardware from kit 860522.

NOTE: The angled end of the aft brace should direct the aft brace toward the driver side of the vehicle.

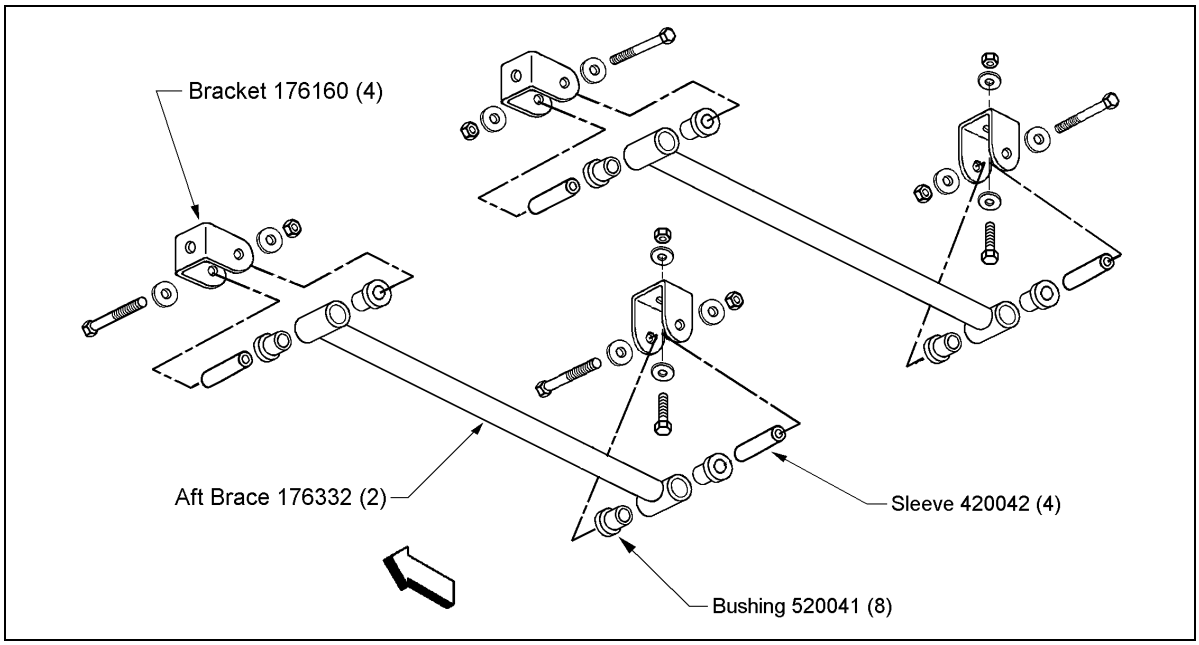

Illustration #16

5. ☐ Rotate the aft braces up to locate the existing holes on the transmission cross member.

6. ☐ Working from the top of the crossmember, insert the shorter sleeve from hardware kit 860520 into the driver side hole and the longer sleeve into the passenger side hole.

7. ☐ Loosely attach the remaining two aft brace brackets to the transmission crossmember with the 1/2" hardware from kit 860518. Use the longer bolt for the passenger side.

8. ☐ Attach the aft braces to the transmission brackets with the hardware from kit 860522. Tighten all bolts securely.

SKID PLATE INSTALLATION

1. ☐ Attach skid plate 176333 to the front and rear crossmembers with the 10 mm hardware from kit 860520. See illustration #17. Make sure skid plate does not contact front differential.

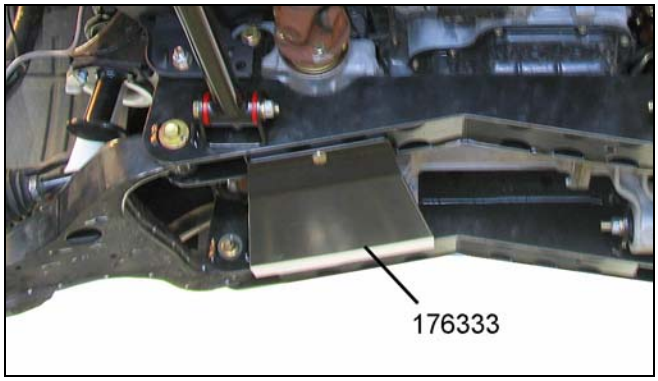

Illustration #17

2. ☐ Install front wheels and lower vehicle to the ground. Tighten lug nuts to 87-108 ft. lbs. Align marks and tighten lower control arm cam bolts to 98 ft. lbs.

REAR SUSPENSION

BRAKE LINE SPACER & CABLE BRACKET INSTALLATION

1. ☐ Chock front wheels. Raise the rear of the vehicle and support the frame with jack stands. Remove rear wheels and set them aside.

2. ☐ Disconnect the ABS lines from the rear axle. If applicable, remove the ABS bracket at the brake line junction block.

3. ☐ Disconnect the brake line junction blocks from the rear axle.

4. ☐ Insert brake line spacer 176335 between junction blocks and axle bracket. See Illustration #18.

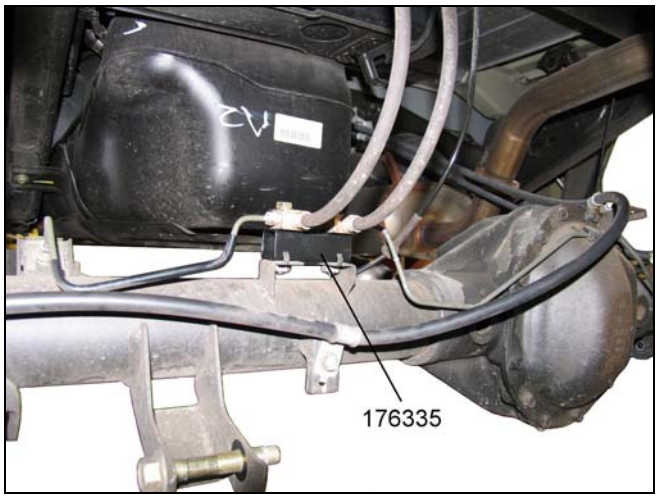

Illustration #18

5. ☐ Using the 8mm washers and longer 8mm bolts from kit 860520, reattach junction blocks to rear axle.

6. ☐ If applicable, attach the ABS bracket to brake line spacer 176335. Use the 6 mm self-tapping screw from hardware kit 860520.

7. ☐ Disconnect the parking brake cables from the mounting bracket above the muffler.

8. ☐ Attach brake cable drop bracket 176334 with the original hardware. See illustration #19.

9. ☐ Attach parking brake cables to drop bracket 176334 with the 8mm hardware from kit 860520.

Illustration #19

RISER BLOCK INSTALLATION

1. ☐ Support the rear axle with a floor jack.

2. ☐ Remove the rear shock absorbers.

3. ☐ Remove the U-bolt nuts, spring plate, and U-bolts on one side only.

4. ☐ Lower the rear axle about 4 inches.

CAUTION: Do not allow the axle to hang from the brake hose.

5. ☐ Install a block pin from kit 860519 into the hole in the axle pad. Place riser block 15140 on the axle pad.

6. ☐ Raise the axle and insert the head of the leaf spring center bolt into the top hole in the riser block.

7. ☐ Using the new U-bolts (740023), attach the leaf spring to the axle with the hardware from kit 860152. See illustration #20. Tighten the U-bolt nuts diagonally to 89 ft. lbs.

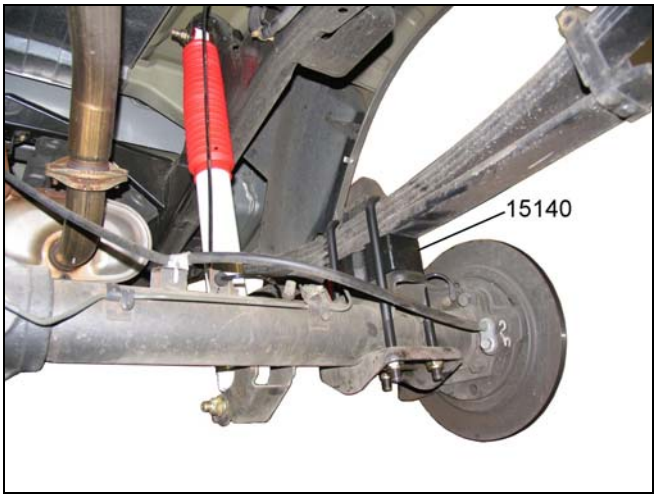

Illustration #20

NOTE: The amount of U-bolt threads exposed should be equal after tightening the nuts.

8. ☐ Repeat steps 3 through 7 for the other side.

9. ☐ Install new Rancho shock absorbers. Tighten mounting bolts to 111 ft. lbs.

10. ☐ Slide the rubber isolators (to provide the proper slack) and reattach the ABS lines.

11. ☐ Install rear wheels and lower vehicle to the ground. Tighten the lug nuts to 98 ft. lbs.

FINAL CHECKS & ADJUSTMENTS

1. ☐ Turn the front wheels completely left then right. Verify adequate tire, wheel, and brake hose clearance. Inspect steering and suspension for tightness and proper operation.

2. ☐ With the suspension at maximum extension (full droop), inspect and rotate all axles and drive shafts. Check for binding and proper slip yoke insertion. The slip yoke should be inserted a minimum of one inch into the transfer case and/or transmission.

3. ☐ Ensure that the vehicle brake system operates correctly. If new brake hoses were installed, verify that each hose allows for full suspension movement.

4. ☐ Readjust headlamps. Have vehicle Aligned at a certified alignment facility.

Recommended 4WD Alignment Specifications
Caster (degrees): 2.37° to 3.12°
Camber (degrees): -.32° to .5°
Sum Toe In (inches): .07 to .15

Recommended 2WD Alignment Specifications
Caster (degrees): 3.27° to 4.02°
Camber (degrees): -.87° to -.12°
Sum Toe In (inches): .07 to .15

Please retain this publication for future reference. See Important Note O.