RELEASED			
REV	DATE	REVISION	DWN
A	8-3-11	RELEASED	ES
-	-	-	-
-	-	-	-

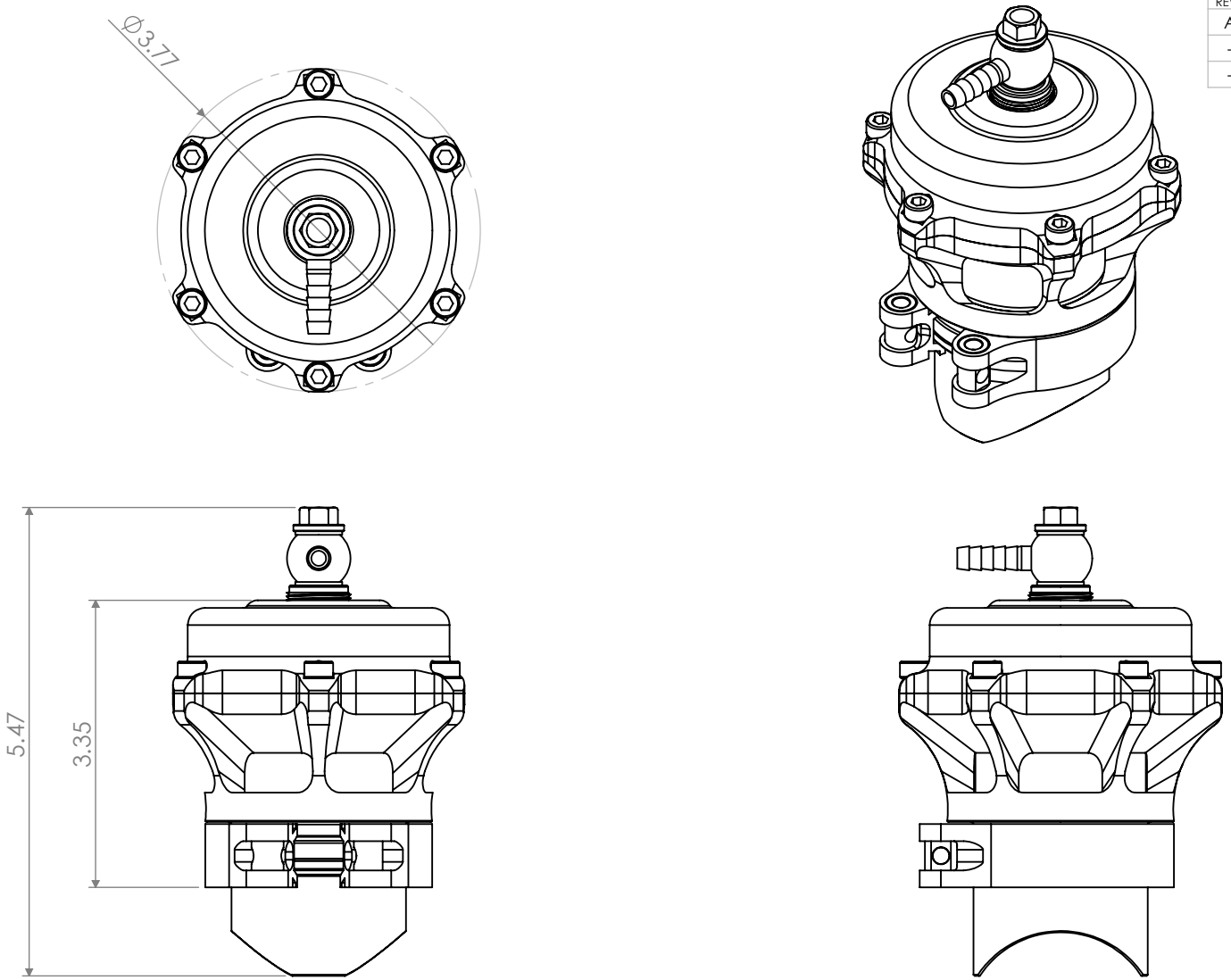

UNLESS OTHERWISE SPECIFIED:
DIMENSIONS ARE IN INCHES
ANGULAR DIMENSIONS ARE IN DEGREES

TOLERANCES:
.XX ± .1
.XXX ± .005
.XXXX ± .0002
ANGULAR: ± .5 DEG
EDGE/CORNER BREAKS .015
FILLET RADII .015
MAX SURFACE ROUGHNESS 125 Ra

DO NOT SCALE DRAWING

MATERIAL

PROPRIETARY AND CONFIDENTIAL
THE INFORMATION CONTAINED IN THIS DRAWING IS THE SOLE PROPERTY OF TiAL PRODUCTS. ANY REPRODUCTION IN PART OR AS A WHOLE WITHOUT THE WRITTEN PERMISSION OF TiAL PRODUCTS IS STRICTLY PROHIBITED.

TiAL SPORT
TiAL PRODUCTS, 450 S. SHIAWASSEE, OWOSSO, MI 48867

TITLE
Q ASSEMBLY

SIZE	PART NO.	REV
A	QBVASSEM	A

DRAWN:	DATE:	CHECKED:	SHEET: 1 OF 1
ES	8-3-11		

5 4 3 2 1